PT. ABB Sakti Industri

Jalan Gajah Tunggal km 1.0
Tangerang 15135, Indonesia

Project Name	:	MV Switchgear for MNA Serang Plant
Switchgear Name	:	MVD-22 20kV Central WTP Area
Panel Type	:	UNISEC
Customer Name	:	PT Multimas Nabati Asahan
Contract No.	:	BE318042
TITLE	:	SLD & GA Drawing

Ind.	Revision	Date	Name		
				Date Prep.	15.11.2018
1	Issued for Approval	18.12.2018	YR	Prepared	YR
0	First Issued	19.11.2018	YR	Checked	AW
				Approved	AI

PROJECT TITLE
MV Switchgear for MNA Serang Plant
Based on: BE318042

ABB EPMV
PT. ABB Sakti Industri

COVER SHEET
SLD & GA Drawing
MVD-22 20kV Central WTP Area

Scale		= H00
Customer	PT Multimas Nabati Asahan	& GAD
Drawing Nbr.		Sh. 1
Customer Doc. Nbr.		Cont. 17

WE RESERVE ALL RIGHTS IN THIS DOCUMENT AND IN THE INFORMATION CONTAINED THEREIN. REPRODUCTION, USE OR DISCLOSURE TO THIRD PARTIES WITHOUT EXPESS AUTHORITY IS STRICTLY FORBIDDEN.

SHEET INDEX

PAGE	PAGE NAME	REVISION		
==MVD-22=H00&GAD/1	COVER SHEET	0	1	
==MVD-22=H00&GAD/2	INDEX OF SHEETS	0	1	
==MVD-22=H00&GAD/3	GENERAL CHARACTERISTICS	0	1	
==MVD-22=H00&GAD/4	REFERENCE DESIGNATIONS	0	1	
==MVD-22=H00&GAD/5	REFERENCE DESIGNATIONS	0	1	
==MVD-22=H00&GAD/6	REFERENCE DESIGNATIONS	0	1	
==MVD-22=H00&GAD/7	REFERENCE DESIGNATIONS	0	1	
==MVD-22=H00&GAD/8	SINGLE LINE DIAGRAM	0	1	
==MVD-22=H00&GAD/9	SINGLE LINE DIAGRAM	0	1	
==MVD-22=H00&GAD/10	INSTALLATION RULES	0	1	
==MVD-22=H00&GAD/11	FRONT VIEW & GA	0	1	
==MVD-22=H00&GAD/12	FOUNDATION FRAMES	0	1	
==MVD-22=H00&GAD/13	FOUNDATION FRAMES DETAILS	0	1	
==MVD-22=H00&GAD/14	FOUNDATION FRAMES DETAILS	0	1	
==MVD-22=H00&GAD/15	SECTION VIEW	0	1	
==MVD-22=H00&GAD/16	SECTION VIEW	0	1	
==MVD-22=H00&GAD/17	SECTION VIEW	0	1	

WE RESERVE ALL RIGHTS IN THIS DOCUMENT AND IN THE INFORMATION CONTAINED THEREIN. REPRODUCTION, USE OR DISCLOSURE TO THIRD PARTIES WITHOUT EXPESS AUTHORITY IS STRICTLY FORBIDDEN.

Ind.	Revision	Date	Name		
				Date Prep.	15.11.2018
1	Issued for Approval	18.12.2018	YR	Prepared	YR
0	First Issued	19.11.2018	YR	Checked	AW
				Approved	AI

PROJECT TITLE
MV Switchgear for MNA Serang Plant
Based on: BE318042

ABB EPMV
PT. ABB Sakti Industri

INDEX OF SHEETS
SLD & GA Drawing
MVD-22 20kV Central WTP Area

Scale		= H00
Customer	PT Multimas Nabati Asahan	& GAD
Drawing Nbr.		Sh. 2
Customer Doc. Nbr.		Cont. 17

CHARACTERISTICS

(IN COMPLIANCE WITH STANDARD IEC 62271-200)

SWITCHGEAR VERSION	= UNISEC
RATED VOLTAGE (Un)	= 24 kV
OPERATING VOLTAGE	= 20 kV
RATED FREQUENCY (fr)	= 50 Hz
RATED LIGHTNING IMPULSE WITHSTAND VOLTAGE (Up)	= 125 kV
RATED POWER FREQUENCY WITHSTAND VOLTAGE (Ud)	= 50 kV
RATED CURRENT OF MAIN BUSBARS (Ir)	= 630 A
RATED SHORT-TIME WITHSTAND CURRENT (Ik)	= 20 kA
RATED PEAK WITHSTAND CURRENT (Ip)	= 50 kA
RATED DURATION OF SHORT CIRCUIT (tk)	= 1 s
INTERNAL ARC CLASSIFICATION (IAC)	= AFLR / 16kAx1s
AMBIENT CONDITION	= NORMAL
AMBIENT AIR TEMPERATURE	= -5°C...+40°C
DEGREE OF PROTECTION (OPERATION SEATS EXCLUDED)	= IP3X
DEGREE OF PROTECTION WITH OPEN DOORS	= IP2X
RATED SUPPLY VOLTAGE OF CONTROL AND SIGNALLING CIRCUITS (Ua)	= 230VAC
RATED SUPPLY VOLTAGE OF SPRING CHARGING MOTOR (Ua)	= 230VAC
RATED SUPPLY VOLTAGE OF LIGHTING AND HEATING CIRCUITS (Ua)	= 230VAC
TYPE OF CABLE FOR LOW VOLTAGE CONDUCTORS	= 450/750V
TYPE OF CABLE FOR LOW VOLTAGE CONDUCTORS	= PVC
CROSS-SECTION OF CONDUCTORS FOR CURRENT CIRCUITS	= 2.5 mm²/BLACK
CROSS-SECTION OF CONDUCTORS FOR VOLTAGE CIRCUITS	= 1.5 mm²/BLACK
CROSS-SECTION OF CONDUCTORS FOR MOTORS	= 2.5 mm²/BLACK
CROSS-SECTION OF OTHER CONDUCTORS (CONTROL AND SIGNALLING CIRCUITS)	= 1.5 mm²/BLACK
CROSS-SECTION OF CONDUCTORS FOR INTERCONNECTIONS	= 1.5 mm²/BLACK
CROSS-SECTION OF CONDUCTORS FOR INTERCONNECTIONS OF SUPPLY VOLTAGE	= 2.5 mm²/BLACK
COMMUNICATION CABLE	= N/A

NOTES

COLOUR OF FRONT DOORS	= RAL 7035
SIDEWALLS PAINTED	= YES
SIDES	= L+R

SUPPLIED IMPLEMENTS

MIMIC DIAGRAM

COUPLE OF SIDES CLOSING

BOTTOM CLOSURE

ISOLATOR OPERATING LEVER

IDENTIFICATION OF CONDUCTORS

FOR IDENTIFICATION OF CONDUCTORS THE "LOCAL END CONNECTION LABELLING" SYSTEM IS USED, IN COMPLIANCE WITH STANDARD IEC 62491 PARAGRAPH 6.2. THIS SYSTEM FORESEES THAT THE MARKING OF A CONDUCTOR END SHOWS THE DESIGNATION OF THE TERMINAL TO WHICH IT IS CONNECTED. IN COMPLIANCE WITH STANDARD IEC 61666 EACH CONDUCTOR IS IDENTIFIED WITH THE REFERENCE DESIGNATION OF THE CONNECTED ELECTRICAL COMPONENT FOLLOWED BY SIGN ":" (COLON), FOLLOWED BY THE TERMINAL DESIGNATION. FOR EXAMPLE THE CONDUCTOR CONNECTED TO TERMINAL "10" OF THE COMPONENT WITH DESIGNATION "-XA" HAS THE MARKING "-XA:10". THE CONDUCTOR MARKING IS PLACED IN SUCH A WAY TO READ IT ALWAYS FROM THE TERMINAL TOWARDS THE CONDUCTOR, AS SHOWN BELOW

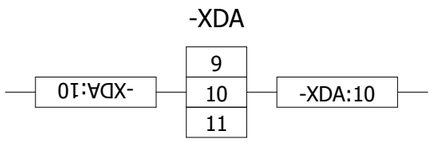

WE RESERVE ALL RIGHTS IN THIS DOCUMENT AND IN THE INFORMATION CONTAINED THEREIN. REPRODUCTION, USE OR DISCLOSURE TO THIRD PARTIES WITHOUT EXPESS AUTHORITY IS STRICTLY FORBIDDEN.

Ind.	Revision	Date	Name		
				Date Prep.	15.11.2018
1	Issued for Approval	18.12.2018	YR	Prepared	YR
0	First Issued	19.11.2018	YR	Checked	AW
				Approved	AI

PROJECT TITLE: MV Switchgear for MNA Serang Plant

Based on: BE318042

ABB EPMV

PT. ABB Sakti Industri

GENERAL CHARACTERISTICS
SLD & GA Drawing
MVD-22 20kV Central WTP Area

Scale		= H00
Customer	PT Multimas Nabati Asahan	& GAD
Drawing Nbr.		Sh. 3
Customer Doc. Nbr.		Cont. 17

REFERENCE DESIGNATION OF OBJECTS IN ELECTRICAL DOCUMENTS

(IN COMPLIANCE WITH STANDARD IEC 81346-2 AND ABB TECHNICAL STANDARD 2NBA000001)

DESIGNATION	DESCRIPTION
-AA	MULTIFUNCTION UNIT (CENTRAL UNIT)
-BAD1,-BAD4	CAPACITIVE VOLTAGE DIVIDER LOCATED ON PHASE L1
-BAD2,-BAD5	CAPACITIVE VOLTAGE DIVIDER LOCATED ON PHASE L2
-BAD3,-BAD6	CAPACITIVE VOLTAGE DIVIDER LOCATED ON PHASE L3
-BAR	VOLTAGE PROTECTION RELAY
-BAS1	VOLTAGE SENSOR LOCATED ON PHASE L1
-BAS2	VOLTAGE SENSOR LOCATED ON PHASE L2
-BAS3	VOLTAGE SENSOR LOCATED ON PHASE L3
-BAT1	VOLTAGE TRANSFORMER LOCATED ON PHASE L1
-BAT2	VOLTAGE TRANSFORMER LOCATED ON PHASE L2
-BAT3	VOLTAGE TRANSFORMER LOCATED ON PHASE L3
-BAT4	VOLTAGE TRANSFORMER IN BUSBAR COMPARTMENT LOCATED ON PHASE L1
-BAT5	VOLTAGE TRANSFORMER IN BUSBAR COMPARTMENT LOCATED ON PHASE L2
-BAT6	VOLTAGE TRANSFORMER IN BUSBAR COMPARTMENT LOCATED ON PHASE L3
-BCD	DIFFERENTIAL PROTECTIVE RELAY
-BCF	FEEDER PROTECTION RELAY
-BCG	GENERATOR PROTECTION RELAY
-BCM	MOTOR PROTECTION RELAY
-BCN	NEUTRAL (RESIDUAL) CURRENT TRANSFORMER
-BCP	TRANSFORMER PROTECTION RELAY
-BCR	CURRENT PROTECTION RELAY
-BCS1	CURRENT SENSOR LOCATED ON PHASE L1
-BCS2	CURRENT SENSOR LOCATED ON PHASE L2
-BCS3	CURRENT SENSOR LOCATED ON PHASE L3
-BCT1	CURRENT TRANSFORMER LOCATED ON PHASE L1
-BCT2	CURRENT TRANSFORMER LOCATED ON PHASE L2
-BCT3	CURRENT TRANSFORMER LOCATED ON PHASE L3
-BCT4,-BCT7	CURRENT TRANSFORMER LOCATED ON PHASE L1
-BCT5,-BCT8	CURRENT TRANSFORMER LOCATED ON PHASE L2
-BCT6,-BCT9	CURRENT TRANSFORMER LOCATED ON PHASE L3
-BCZ	DISTANCE PROTECTION RELAY
-BEF	FREQUENCY PROTECTION RELAY
-BER	SUPERVISION RELAYS
-BES	SYNCHRONIZING RELAY
-BET	THERMAL PROTECTION RELAY
-BGA1	POSITION SWITCH FOR DETECTION OF INTERNAL ARCING IN CIRCUIT-BREAKER COMPARTMENT
-BGA2	POSITION SWITCH FOR DETECTION OF INTERNAL ARCING IN BUSBAR COMPARTMENT (SINGLE BUSBAR SYSTEM) OR IN FRONT BUSBAR COMPARTMENT (DOUBLE BUSBAR SYSTEM)
-BGA3	POSITION SWITCH FOR DETECTION OF INTERNAL ARCING IN CABLE COMPARTMENT
-BGA4	POSITION SWITCH FOR DETECTION OF INTERNAL ARCING IN REAR BUSBAR COMPARTMENT (DOUBLE BUSBAR SYSTEM)
-BGB1...-BGB3	POSITION SWITCHES OF CIRCUIT-BREAKER
-BGB4	POSITION SWITCH OF CIRCUIT-BREAKER: PASSING CONTACT CLOSING MOMENTARILY WHEN THE BREAKER OPENS
-BGB5	POSITION SWITCH OF CIRCUIT-BREAKER SIGNALLING UNDERVOLTAGE RELEASE ENERGIZED
-BGB6	POSITION SWITCH OF CIRCUIT-BREAKER SIGNALLING UNDERVOLTAGE RELEASE EXCLUDED MECHANICALLY
-BGB7	POSITION SWITCHES OF CIRCUIT-BREAKER ON SWITCHGEAR
-BGB8...-BGB10	POSITION SWITCHES OF CIRCUIT-BREAKER
-BGB11	POSITION SWITCH OF CIRCUIT-BREAKER OPERATING FOR MANUAL OPENING
-BGB12	PROXIMITY SWITCH SIGNALLING CIRCUIT-BREAKER IN OPEN POSITION
-BGB13	PROXIMITY SWITCH SIGNALLING CIRCUIT-BREAKER IN CLOSED POSITION
-BGD	POSITION SWITCH OF L.V. INSTRUMENT COMPARTMENT DOOR.
-BGD1	POSITION SWITCH OF CIRCUIT-BREAKER COMPARTMENT DOOR
-BGD2	POSITION SWITCH OF CABLE COMPARTMENT DOOR
-BGE1	POSITION SWITCHES SIGNALLING EARTHING SWITCH -QCE IN OPEN POSITION
-BGE2	POSITION SWITCHES SIGNALLING EARTHING SWITCH -QCE IN CLOSED POSITION
-BGE3	POSITION SWITCHES SIGNALLING EARTHING SWITCH -QCE IN OPEN POSITION AND NOT IN OPERATION (OPERATING LEVER NOT INSERTED)
-BGE4	POSITION SWITCHES OF OPERATION OF EARTHING SWITCH -QCE ACTUATED BY ELECTRIC MOTOR
-BGE5	POSITION SWITCHES OF OPERATION OF EARTHING SWITCH -QCE1 OR -QCE2 ACTUATED BY ELECTRIC MOTOR
-BGE7	POSITION SWITCH SIGNALLING EARTHING SWITCH NOT IN MANUAL OPERATION
-BGE8	POSITION SWITCHES OF EARTHING SWITCH -QCE SUPPLIED TOGETHER WITH SWITCH- DISCONNECTOR -QBS
-BGE11	POSITION SWITCHES SIGNALLING EARTHING SWITCH -QCE1 OR -QCE2 IN OPEN POSITION
-BGE12	POSITION SWITCHES SIGNALLING EARTHING SWITCH -QCE1 OR -QCE2 IN CLOSED POSITION
-BGE13	POSITION SWITCHES SIGNALLING EARTHING SWITCH -QCE1 OR -QCE2 IN OPEN POSITION AND NOT IN OPERATION (OPERATING LEVER NOT INSERTED)
-BGE14, -BGE15	POSITION SWITCHES FOR OPERATION OF EARTHING SWITCH -QCE SUPPLIED TOGETHER WITH SWITCH-DISCONNECTOR -QBS, ACTUATED BY ELECTRIC MOTOR
-BGF	POSITION SWITCHES OF MEDIUM VOLTAGE FUSES
-BGI1	POSITION SWITCHES SIGNALLING DISCONNECTOR -QBD IN OPEN POSITION
-BGI2	POSITION SWITCHES SIGNALLING DISCONNECTOR -QBD IN CLOSED POSITION
-BGI3	POSITION SWITCHES SIGNALLING DISCONNECTOR -QBD IN OPEN POSITION AND NOT IN OPERATION (OPERATING LEVER NOT INSERTED)
-BGI4	POSITION SWITCHES OF OPERATION OF DISCONNECTOR -QBD1 ACTUATED BY ELECTRIC MOTOR
-BGI5	POSITION SWITCHES OF OPERATION OF DISCONNECTOR -QBD2 ACTUATED BY ELECTRIC MOTOR
-BGI6	POSITION SWITCH SIGNALLING DISCONNECTOR (OR SWITCH-DISCONNECTOR) -QBD NOT IN EMERGENCY MANUAL OPERATION
-BGI7	POSITION SWITCH SIGNALLING DICONNECTOR (OR SWITCH-DISCONNECTOR) -QBD NOT IN MANUAL OPERATION
-BGI8	POSITION SWITCHES OF SWITCH-DISCONNECTOR -QBS
-BGI9	POSITION SWITCHES OF OPERATION OF SWITCH-DISCONNECTOR -QBS ACTUATED BY ELECTRIC MOTOR
-BGI11	POSITION SWITCHES SIGNALLING DISCONNECTOR -QBD1 IN OPEN POSITION
-BGI12	POSITION SWITCHES SIGNALLING DISCONNECTOR -QBD1 IN CLOSED POSITION
-BGI13	POSITION SWITCHES SIGNALLING DISCONNECTOR -QBD1 IN OPEN POSITION AND NOT IN OPERATION (OPERATING LEVER NOT INSERTED)
-BGI14, -BGI15	POSITION SWITCHES OF OPERATION OF DISCONNECTOR -QBD1 ACTUATED BY ELECTRIC MOTOR
-BGI21	POSITION SWITCHES SIGNALLING DISCONNECTOR -QBD2 IN OPEN POSITION
-BGI22	POSITION SWITCHES SIGNALLING DISCONNECTOR -QBD2 IN CLOSED POSITION
-BGI23	POSITION SWITCHES SIGNALLING DISCONNECTOR -QBD2 IN OPEN POSITION AND NOT IN OPERATION (OPERATING LEVER NOT INSERTED)
-BGI24, -BGI25	POSITION SWITCHES OF OPERATION OF DISCONNECTOR -QBD2 ACTUATED BY ELECTRIC MOTOR

WE RESERVE ALL RIGHTS IN THIS DOCUMENT AND IN THE INFORMATION CONTAINED THEREIN. REPRODUCTION, USE OR DISCLOSURE TO THIRD PARTIES WITHOUT EXPESS AUTHORITY IS STRICTLY FORBIDDEN.

Ind.	Revision	Date	Name		
				Date Prep.	15.11.2018
1	Issued for Approval	18.12.2018	YR	Prepared	YR
0	First Issued	19.11.2018	YR	Checked	AW
				Approved	AI

PROJECT TITLE
MV Switchgear for MNA Serang Plant
Based on: BE318042

ABB EPMV
PT. ABB Sakti Industri

REFERENCE DESIGNATIONS
SLD & GA Drawing
MVD-22 20kV Central WTP Area

Scale		= H00
Customer	PT Multimas Nabati Asahan	& GAD
Drawing Nbr.		Sh. 4
Customer Doc. Nbr.		Cont. 17

-BGI31	POSITION SWITCHES SIGNALLING DISCONNECTOR -QBD3 IN OPEN POSITION
-BGI32	POSITION SWITCHES SIGNALLING DISCONNECTOR -QBD3 IN CLOSED POSITION
-BGI33	POSITION SWITCHES SIGNALLING DISCONNECTOR -QBD3 IN OPEN POSITION AND NOT IN OPERATION (OPERATING LEVER NOT INSERTED)
-BGI41...	POSITION SWITCHES SIGNALLING SWITCH-DISCONNECTOR -QBS CLOSED IN FEEDER POSITION
-BGI42	POSITION SWITCHES SIGNALLING SWITCH-DISCONNECTOR -QBS IN OPEN POSITION
-BGI43...	POSITION SWITCHES SIGNALLING SWITCH-DISCONNECTOR -QBS CLOSED IN EARTH POSITION
-BGI51	POSITION SWITCHES SIGNALLING DISCONNECTOR -QBD5 CLOSED IN FEEDER POSITION
-BGI52	POSITION SWITCHES SIGNALLING DISCONNECTOR -QBD5 IN OPEN POSITION
-BGI53	POSITION SWITCHES SIGNALLING DISCONNECTOR -QBD5 CLOSED IN EARTH POSITION
-BGK	POSITION SWITCH OF KEY LOCK
-BGL1	POSITION SWITCH OF ELECTROMECHANICAL LOCK -RLE1
-BGS1...-BGS4	POSITION SWITCHES OF CIRCUIT-BREAKER SPRINGS
-BGS5	PROXIMITY SWITCH SIGNALLING SPRINGS IN CHARGED POSITION
-BGT1	POSITION SWITCHES ON TRUCK SIGNALLING TRUCK IN SERVICE POSITION
-BGT2	POSITION SWITCHES ON TRUCK SIGNALLING TRUCK IN TEST POSITION
-BGT3	POSITION SWITCH ON TRUCK SIGNALLING TRUCK NOT IN ISOLATING TRAVEL POSITION
-BGT4	POSITION SWITCHES ON SWITCHGEAR SIGNALLING TRUCK IN SERVICE POSITION
-BGT5	POSITION SWITCHES ON SWITCHGEAR SIGNALLING TRUCK IN TEST POSITION
-BGT6	POSITION SWITCHES SIGNALLING V.T. TRUCK IN SERVICE POSITION
-BGT7	POSITION SWITCHES SIGNALLING V.T. TRUCK IN TEST POSITION
-BGT8	POSITION SWITCHES SIGNALLING EARTHING TRUCK IN SERVICE POSITION
-BGT11	PROXIMITY SWITCH SIGNALLING TRUCK IN SERVICE POSITION
-BGT12	PROXIMITY SWITCH SIGNALLING TRUCK IN TEST POSITION
-BGV1	POSITION SWITCH OF FRONT VENTILATOR
-BGV2	POSITION SWITCH OF REAR VENTILATOR
-BM	HYGROSTAT
-BPA4	PRESSURE SWITCH LOCATED IN CABLE COMPARTMENT FOR DETECTION OF INTERNAL ARCING
-BPA5	PRESSURE SWITCH LOCATED IN CIRCUIT-BREAKER OR IN UPPER VT COMPARTMENT FOR DETECTION OF INTERNAL ARCING
-BPA6	PRESSURE SWITCH LOCATED IN BUSBAR OR IN BUSBAR AND CIRCUIT-BREAKER COMPARTMENT FOR DETECTION OF INTERNAL ARCING
-BPA7	PRESSURE SWITCH LOCATED IN VOLTAGE TRANSFORMER ISOLATING COMPARTMENT FOR DETECTION OF INTERNAL ARCING
-BPS1	PRESSURE SWITCH LOCATED ON CIRCUIT-BREAKER OR ON POLE OF PHASE L1 OF CIRCUIT-BREAKER
-BPS2	PRESSURE SWITCH LOCATED ON CIRCUIT-BREAKER POLE OF PHASE L2
-BPS3	PRESSURE SWITCH LOCATED ON CIRCUIT-BREAKER POLE OF PHASE L3
-BR	FLAME DETECTORS, SMOKE DETECTORS
-BT	THERMOSTAT
-BT1	THERMOSTAT FOR DE-ENERGIZATION OF VENTILATORS
-BT2	THERMOSTAT FOR ENERGIZATION OF VENTILATORS
-BT3	THERMOSTAT SIGNALLING HIGH TEMPERATURE ALARM
-BU	BUCHHOLZ RELAY
-BX1	UNIT WITH SENSORS FOR DETECTION OF INTERNAL ARCING
-BX2	ADDITIONAL CURRENT SENSING UNIT FOR DETECTION OF INTERNAL ARCING
-BZ,-BZ4	MULTIFUNCTION SENSORS
-BZ1	COMBINED CURRENT AND VOLTAGE SENSOR, LOCATED ON PHASE L1
-BZ2	COMBINED CURRENT AND VOLTAGE SENSOR, LOCATED ON PHASE L2
-BZ3	COMBINED CURRENT AND VOLTAGE SENSOR, LOCATED ON PHASE L3

-CA	CAPACITORS
-CA1	CAPACITOR FOR FRONT VENTILATOR
-CA2	CAPACITOR FOR REAR VENTILATOR
-EA1	LIGHTING LAMP LOCATED IN L.V. INSTRUMENT COMPARTMENT.
-EA2	LIGHTING LAMP LOCATED IN CABLE COMPARTMENT
-EA3	LIGHTING LAMP LOCATED IN OPERATING MECHANISM ENCLOSURE
-EA4	LIGHTING LAMP LOCATED IN CIRCUIT BREAKER COMPARTIMENT
-EB1	HEATER LOCATED IN CABLE COMPARTMENT
-EB2	HEATER LOCATED IN CIRCUIT-BREAKER COMPARTMENT
-EB3	HEATER LOCATED IN MOTOR CABINET
-EB4	HEATER FOR VENTILATION TEST
-EB5	HEATER LOCATED IN L.V. INSTRUMET COMPARTMENT.
-EB7	HEATERS LOCATED IN LEFT SIDE OF THE OPERATING MECHANISM ENCLOSURE
-EB8	HEATERS LOCATED IN RIGHT SIDE OF THE OPERATING MECHANISM ENCLOSURE
-FA1	SURGE ARRESTER LOCATED ON PHASE L1
-FA2	SURGE ARRESTER LOCATED ON PHASE L2
-FA3	SURGE ARRESTER LOCATED ON PHASE L3
-FCD	FUSE-DISCONNECTORS FOR PROTECTION OF AUXILIARY CIRCUITS
-FCF1	MEDIUM VOLTAGE FUSE LOCATED ON PHASE L1
-FCF2	MEDIUM VOLTAGE FUSE LOCATED ON PHASE L2
-FCF3	MEDIUM VOLTAGE FUSE LOCATED ON PHASE L3
-FCM1	MINIATURE CIRCUIT-BREAKER FOR PROTECTION OF SPRINGS CHARGING MOTOR ON MAIN CIRCUIT-BREAKER
-FCM2...-FCM10	MINIATURE CIRCUIT-BREAKERS FOR PROTECTION OF AUXILIARY CIRCUITS
-FCM11	MINIATURE CIRCUIT-BREAKER FOR PROTECTION OF VENTILATOR -MV1
-FCM12	MINIATURE CIRCUIT-BREAKER FOR PROTECTION OF VENTILATOR -MV2
-FCM13	MINIATURE CIRCUIT-BREAKER FOR PROTECTION OF VENTILATOR -MV3
-FCT	THERMAL OVERLOAD RELEASES
-GA	GENERATORS
-GQ1	FRONT VENTILATOR
-GQ2	REAR VENTILATOR
-GQ3	VENTILATOR LOCATED ON CIRCUIT-BREAKER TRUCK
-KFA1	AUXILIARY RELAY SIGNALLING LOW GAS PRESSURE
-KFA2	AUXILIARY RELAY SIGNALLING INSUFFICIENT GAS PRESSURE
-KFA3...-KFA9	AUXILIARY RELAYS OR CONTACTORS
-KFC	CLOSING RELAYS OR CONTACTORS
-KFI	INTEGRATED CIRCUITS
-KFL	LOCKOUT RELAY
-KFM	MICROPROCESSORS
-KFN	ANTIPUMPING RELAYS
-KFO	OPENING RELAYS OR CONTACTORS
-KFP	PROGRAMMABLE LOGIC CONTROLLERS (PLC)
-KFR	RECLOSING RELAYS
-KFS	SYNCHRONIZING DEVICES
-KFT	AUXILIARY TIME RELAYS, DELAY ELEMENTS
-KFZ	CONTROLLERS
-MBC	CLOSING RELEASE OF CIRCUIT-BREAKER
-MAD	MOTOR FOR ELECTRICAL OPERATION OF DISCONNECTOR -QBD
-MAD1	MOTOR FOR ELECTRICAL OPERATION OF DICONNECTOR -QBD1
-MAD2	MOTOR FOR ELECTRICAL OPERATION OF DICONNECTOR -QBD2
-MAD9	MOTOR FOR ELECTRICAL OPERATION OF SWITCH-DISCONNECTOR -QBS

WE RESERVE ALL RIGHTS IN THIS DOCUMENT AND IN THE INFORMATION CONTAINED THEREIN. REPRODUCTION, USE OR DISCLOSURE TO THIRD PARTIES WITHOUT EXPESS AUTHORITY IS STRICTLY FORBIDDEN.

Ind.	Revision	Date	Name		
				Date Prep.	15.11.2018
1	Issued for Approval	18.12.2018	YR	Prepared	YR
0	First Issued	19.11.2018	YR	Checked	AW
				Approved	AI

PROJECT TITLE
MV Switchgear for MNA Serang Plant
Based on: BE318042

ABB EPMV
PT. ABB Sakti Industri

REFERENCE DESIGNATIONS
SLD & GA Drawing
MVD-22 20kV Central WTP Area

Scale		= H00
Customer	PT Multimas Nabati Asahan	& GAD
Drawing Nbr.		Sh. 5
Customer Doc. Nbr.		Cont. 17

-MAE	MOTOR FOR ELECTRICAL OPERATION OF EARTHING SWITCH -QCE
-MAE1	MOTOR FOR ELECTRICAL OPERATION OF EARTHING SWITCH -QCE1 OR -QCE2
-MAE8	MOTOR FOR ELECTRICAL OPERATION OF EARTHING SWITCH -QCE SUPPLIED TOGETHER WITH SWITCH-DISCONNECTOR -QBS
-MAS	MOTOR FOR CIRCUIT-BREAKER SPRINGS CHARGING
-MAT	MOTOR FOR ELECTRICAL OPERATION OF TRUCK RACKING-IN/OUT
-MBC	CLOSING RELEASE OF CIRCUIT-BREAKER
-MBC4	CLOSING RELEASE OF SWITCH-DISCONNECTOR -QBS
-MBO1	FIRST OPENING RELEASE OF CIRCUIT-BREAKER
-MBO2	SECOND OPENING RELEASE OF CIRCUIT-BREAKER
-MBO3	OPENING SOLENOID FOR OVERCURRENT RELEASE OF CIRCUIT-BREAKER OR INDIRECT OVERCURRENT RELEASE ON CIRCUIT-BREAKER
-MBO4	OPENING RELEASE OF SWITCH-DISCONNECTOR -QBS
-MBU	UNDERVOLTAGE RELEASE OF CIRCUIT-BREAKER
-PFB	BLUE SIGNAL LAMPS
-PFF	FLAG RELAYS
-PFG	GREEN SIGNAL LAMPS
-PFR	RED SIGNAL LAMPS
-PFS	SHORT CIRCUIT INDICATORS
-PFV	VOLTAGE INDICATORS
-PFV1	VOLTAGE INDICATORS ON FEEDER SIDE
-PFV2	VOLTAGE INDICATORS ON BUSBAR SIDE
-PFW	WHITE SIGNAL LAMPS
-PFX	CROSS INDICATORS, ELECTROMECHANICAL INDICATORS
-PFY	YELLOW SIGNAL LAMPS
-PGA	AMMETERS
-PGC	COUNTERS
-PGF	FREQUENCYMETERS
-PGH	HOURMETERS
-PGI	PROTECTION AND CONTROL UNIT: HUMAN MACHINE INTERFACE
-PGI1	HUMAN MACHINE INTERFACE OF ELECTRONIC CONTROLLED CIRCUIT-BREAKER (ON CIRCUIT-BREAKER)
-PGI2	HUMAN MACHINE INTERFACE FOR ELECTRONIC CONTROLLED CIRCUIT-BREAKER (ON SWITCHGEAR)
-PGJ	ACTIVE ENERGY METERS
-PGK	REACTIVE ENERGY METERS
-PGM	MULTIFUNCTION INDICATORS
-PGP	POWER-FACTOR METERS
-PGQ	VARMETERS
-PGS	SYNCHRONOSCOPES
-PGV	VOLTMETERS
-PGW	WATTMETERS
-PJ	ACOUSTICAL SIGNAL DEVICES (BELLS, SIRENS)
-QAB	CIRCUIT-BREAKERS
-QAC	CONTACTORS (FOR POWER)
-QBD	DISCONNECTORS
-QBD1	FRONT BUSBAR DISCONNECTORS (DOUBLE BUSBAR SYSTEM)
-QBD2	REAR BUSBAR DISCONNECTORS (DOUBLE BUSBAR SYSTEM)
-QBD3	FEEDER DISCONNECTORS (DOUBLE BUSBAR SYSTEM)
-QBD4	TWO-WAY DISCONNECTOR
-QBD5	TWO-WAY DISCONNECTOR ON BUSBAR RISER

-QBH	MANUAL CIRCUIT-BREAKERS
-QBL	LINKS
-QBM	MINIATURE SWITCH-DISCONNECTORS
-QBS	SWITCH-DISCONNECTORS
-QBT	TRUCK
-QCA	EARTHING SWITCH FOR ELIMINATION OF INTERNAL ARCING
-QCE	EARTHING SWITCH
-QCE1	EARTHING SWITCH OF BUSBARS (SINGLE BUSBAR SYSTEM) OR OF FRONT BUSBARS (DOUBLE BUSBAR SYSTEM)
-QCE2	EARTHING SWITCH OF REAR BUSBARS (DOUBLE BUSBAR SYSTEM)
-QQ	CLUTCHES
-RAA	ANTIFERRORESONANCE RESISTOR
-RAD	DIODES
-RAI	INDUCTORS
-RAR	RESISTORS
-RF	FILTERS
-RLE1	ELECTROMECHANICAL LOCK PREVENTING CIRCUIT-BREAKER CLOSING
-RLE2	ELECTROMECHANICAL LOCK PREVENTING TRUCK RACKING-IN/OUT
-RLE3	ELECTROMECHANICAL LOCK PREVENTING INSERTION OF LEVER FOR CLOSING OPERATION OF EARTHING SWITCH -QCE
-RLE4	ELECTROMECHANICAL LOCK PREVENTING THE DOOR OPENING OPERATION
-RLE5	ELECTROMECHANICAL LOCK PREVENTING OPERATION OF DISCONNECTOR -QBD
-RLE6	ELECTROMECHANICAL LOCK PREVENTING INSERTION OF LEVER FOR CLOSING OPERATION OF DISCONNECTOR -QBD1
-RLE7	ELECTROMECHANICAL LOCK PREVENTING INSERTION OF LEVER FOR CLOSING OPERATION OF DISCONNECTOR -QBD2
-RLE8	ELECTROMECHANICAL LOCK PREVENTING INSERTION OF LEVER FOR CLOSING OPERATION OF EARTHING SWITCH -QCE1 OR -QCE2
-RLE9	ELECTROMECHANICAL LOCK PREVENTING OPERATION OF SWITCH-DISCONNECTOR -QBS
-RLE11	ELECTROMECHANICAL LOCK PREVENTING INSERTION OF LEVER FOR OPERATION OF DISCONNECTOR -QBD4
-RLE12	ELECTROMECHANICAL LOCK PREVENTING INSERTION OF LEVER FOR OPERATION OF DISCONNECTOR -QBD5
-SFA	AMMETRIC SWITCHES
-SFC	CONTROL SWITCHES, CLOSING PUSH-BUTTONS
-SFL	LOCKING CONTACTS
-SFO	OPENING PUSH-BUTTONS
-SFR	RESET PUSH-BUTTONS
-SFS	SELECTOR SWITCHES
-SFT	TEST PUSH-BUTTONS
-SFU	UNLOCKING PUSH-BUTTONS
-SFV	VOLTMETRIC SWITCHES
-TA	POWER TRANSFORMERS
-TB	CONVERTER
-TB1	RECTIFIER FOR FIRST OPENING RELEASE
-TB2	RECTIFIER FOR SECOND OPENING RELEASE
-TB3	RECTIFIER FOR CLOSING RELEASE
-TB4	RECTIFIER FOR ELECTROMECHANICAL LOCK PREVENTING CIRCUIT-BREAKER CLOSING
-TB5	RECTIFIER FOR ELECTROMECHANICAL LOCK PREVENTING TRUCK RACKING-IN/OUT
-TB6	RECTIFIER FOR UNDERVOLTAGE RELEASE
-TB7	ERECTIFIER FOR INDIRECT OVERCURRENT RELEASE ON CIRCUIT-BREAKER

WE RESERVE ALL RIGHTS IN THIS DOCUMENT AND IN THE INFORMATION CONTAINED THEREIN. REPRODUCTION, USE OR DISCLOSURE TO THIRD PARTIES WITHOUT EXPESS AUTHORITY IS STRICTLY FORBIDDEN.

Ind.	Revision	Date	Name		
				Date Prep.	15.11.2018
1	Issued for Approval	18.12.2018	YR	Prepared	YR
0	First Issued	19.11.2018	YR	Checked	AW
				Approved	AI

PROJECT TITLE
MV Switchgear for MNA Serang Plant
Based on: BE318042

ABB EPMV
PT. ABB Sakti Industri

REFERENCE DESIGNATIONS
SLD & GA Drawing
MVD-22 20kV Central WTP Area

Scale		= H00
Customer	PT Multimas Nabati Asahan	& GAD
Drawing Nbr.		Sh. 6
Customer Doc. Nbr.		Cont. 17

-TFA	ACTIVE POWER TRANSDUCERS
-TFC	CURRENT TRANSDUCERS
-TFF	FREQUENCY TRANSDUCERS
-TFJ	ACTIVE ENERGY TRANSDUCERS
-TFK	REACTIVE ENERGY TRANSDUCERS
-TFM	MULTIFUNCTION TRANSDUCERS
-TFP	POWER-FACTOR TRANSDUCERS
-TFQ	REACTIVE POWER TRANSDUCERS
-TFS	SIGNAL CONVERTERS
-TFV	VOLTAGE TRANSDUCERS
-WA	BUSBARS
-WBC	POWER CABLES
-WE	EARTHING CABLES FOR L.V. INSTRUMENT COMPARTMENT.
-WGC	CONTROL CABLES
-WGS	COMMUNICATION CABLES (SHIELDED TWISTED PAIRS)
-WH	OPTICAL FIBRES
-XDA	TERMINAL BLOCK FOR CIRCUITS OF CURRENT TRANSFORMERS
-XDA1	CONNECTOR FOR CIRCUITS OF CURRENT TRANSFORMERS LOCATED ON PHASE L1
-XDA2	CONNECTOR FOR CIRCUITS OF CURRENT TRANSFORMERS LOCATED ON PHASE L2
-XDA3	CONNECTOR FOR CIRCUITS OF CURRENT TRANSFORMERS LOCATED ON PHASE L3
-XDA5	CONNECTOR FOR CIRCUITS OF NEUTRAL (RESIDUAL) CURRENT TRANSFORMER
-XDB	CONNECTOR FOR ISOLATION OF CIRCUIT-BREAKER (OR UPPER VOLTAGE TRANSFORMER TRUCK) AUXILIARY CIRCUITS
-XDB1	CONNECTOR FOR AUXILIARY CIRCUITS OF CIRCUIT-BREAKER (OR UPPER VOLTAGE TRANSFORMER TRUCK)
-XDB2	CONNECTOR FOR ADDITIONAL AUXILIARY CIRCUITS OF CIRCUIT-BREAKER
-XDB10...-XDB89	CONNECTOR FOR CIRCUIT-BREAKER INTERNAL CIRCUITS
-XDB7	CONNECTOR FOR TRUCK POSITION CONTACTS
-XDB91	CONNECTOR FOR OPENING RELEASE CIRCUITS OF SWITCH-DISCONNECTOR
-XDB92	CONNECTOR FOR CLOSING RELEASE CIRCUITS OF SWITCH-DISCONNECTOR
-XDB93	CONNECTOR FOR POSITION SWITCHES OF SWITCH-DISCONNECTOR
-XDB95	CONNECTOR FOR CIRCUITS OF EARTHING SWITCH LOCKING MAGNET
-XDC	CUSTOMER TERMINAL BLOCK
-XDC1	CUSTOMER TERMINAL BLOCK FOR AUXILIARY CIRCUITS OF CIRCUIT BREAKER
-XDC2	CUSTOMER TERMINAL BLOCK FOR AUXILIARY CIRCUITS OF SWITCH-DISCONNECTOR
-XDC3	CUSTOMER TERMINAL BLOCK FOR AUXILIARY CIRCUITS OF PROTECTION RELAY AND MULTIFUNCTION UNIT
-XDC4	CUSTOMER TERMINAL BLOCK FOR AUXILIARY CIRCUITS OF VOLTAGE TRANSFORMERS
-XDC5	CUSTOMER TERMINAL BLOCK FOR AUXILIARY CIRCUITS OF MINIATURE CIRCUIT BREAKER
-XDE	TERMINAL BLOCK FOR AUXILIARY CIRCUITS OF EARTHING SWITCH -QCE
-XDE1	TERMINAL BLOCK FOR INTERNAL CIRCUITS OF EARTHING SWITCH -QCE
-XDE2	TERMINAL BLOCK FOR AUXILIARY CIRCUITS OF EARTHING SWITCH -QCE1 OR -QCE2
-XDE3	TERMINAL BLOCK FOR INTERNAL CIRCUITS OF EARTHING SWITCH -QCE1 OR -QCE2
-XDF	TERMINAL BLOCK FOR AUXILIARY CIRCUITS OF FORCED COOLING VENTILATORS
-XDF1	CONNECTOR FOR ISOLATION OF CIRCUITS OF FRONT VENTILATOR
-XDF2	CONNECTOR FOR REAR VENTILATOR CIRCUITS
-XDF3	CONNECTOR FOR FRONT VENTILATOR CIRCUITS
-XDH	TERMINAL BLOCK FOR VARIOUS CIRCUITS (HEATERS, POSITION SWITCHES DETECTING INTERNAL ARCING, ETC.)
-XDI	TERMINAL BLOCK FOR INTERCONNECTION (CONNECTION BETWEEN PANELS)
-XDI1	TERMINAL BLOCK FOR INTERCONNECTIONS OF CONTROL CIRCUITS
-XDI2	TERMINAL BLOCK FOR INTERCONNECTIONS OF CIRCUITS OF MOTOR FOR CIRCUIT-BREAKER SPRINGS CHARGING
-XDI3	TERMINAL BLOCK FOR INTERCONNECTIONS OF CIRCUITS OF MOTOR FOR SWITCH-DISCONNECTOR OPERATION
-XDI4	TERMINAL BLOCK FOR INTERCONNECTIONS OF A.C. AUXILIARY CIRCUITS
-XDI6	TERMINAL BLOCK FOR INTERCONNECTION (CONNECTION BETWEEN PANELS) OF VOLTAGE CIRCUITS
-XDI7	TERMINAL BLOCK FOR INTERCONNECTION OF MOD-BUS
-XDI8	TERMINAL BLOCK FOR INTERCONNECTIONS OF CURRENT CIRCUITS
-XDI9	TERMINAL BLOCK FOR SPECIAL USE
-XDJ	TERMINAL BLOCK FOR AUXILIARY CIRCUITS OF DISCONNECTORS -QBD
-XDJ1	TERMINAL BLOCK FOR AUXILIARY CIRCUITS OF SWITCH-DISCONNECTOR -QBS
-XDM	SEALABLE TERMINAL BLOCK FOR MEASUREMENT
-XDS	CURRENT SOCKETS
-XDT	TERMINAL BLOCK FOR POSITION CONTACTS OF TRUCK AND OF CONNECTOR -XDB
-XDU	CONNECTOR FOR ISOLATION OF CIRCUITS OF LOWER VOLTAGE TRANSFORMER TRUCK
-XDU1	TERMINAL BLOCK FOR CIRCUITS OF LOWER VOLTAGE TRANSFORMER TRUCK
-XDV	TERMINAL BLOCK FOR CIRCUITS OF VOLTAGE TRANSFORMERS
-XDV1	CONNECTOR FOR CIRCUITS OF VOLTAGE TRANSFORMERS LOCATED ON PHASE L1
-XDV2	CONNECTOR FOR CIRCUITS OF VOLTAGE TRANSFORMERS LOCATED ON PHASE L2
-XDV3	CONNECTOR FOR CIRCUITS OF VOLTAGE TRANSFORMERS LOCATED ON PHASE L3
-XDV4	CONNECTOR FOR CIRCUITS OF ANTIFERRORESONANCE RESISTOR
-XDX	SUPPORT TERMINAL BLOCK
-XE1	EARTHING TERMINAL BLOCKS FOR LV COMPARTMENT, LEFT SIDE
-XE2	EARTHING TERMINAL BLOCKS FOR LV COMPARTMENT, RIGHT SIDE
-XE5	EARTHING TERMINAL BLOCKS FOR MV COMPARTMENT, VOLTAGE INDICATOR SIDE
-XE6	EARTHING TERMINAL BLOCKS FOR MV COMPARTMENT, REAR BOTTOM SIDE
-XE7	EARTHING TERMINAL BLOCKS FOR MV COMPARTMENT, LEFT SIDE
-XE8	EARTHING TERMINAL BLOCKS FOR MV COMPARTMENT, FRONT BOTTOM SIDE
-XE9	EARTHING TERMINAL BLOCK FOR TRANSFORMERS IN BUSBAR COMPARTMENT

WE RESERVE ALL RIGHTS IN THIS DOCUMENT AND IN THE INFORMATION CONTAINED THEREIN. REPRODUCTION, USE OR DISCLOSURE TO THIRD PARTIES WITHOUT EXPESS AUTHORITY IS STRICTLY FORBIDDEN.

Ind.	Revision	Date	Name		
				Date Prep.	15.11.2018
1	Issued for Approval	18.12.2018	YR	Prepared	YR
0	First Issued	19.11.2018	YR	Checked	AW
				Approved	AI

PROJECT TITLE
MV Switchgear for MNA Serang Plant
Based on: BE318042

ABB EPMV
PT. ABB Sakti Industri

REFERENCE DESIGNATIONS
SLD & GA Drawing
MVD-22 20kV Central WTP Area

Scale		= H00
Customer	PT Multimas Nabati Asahan	& GAD
Drawing Nbr.		Sh. 7
Customer Doc. Nbr.		Cont. 17

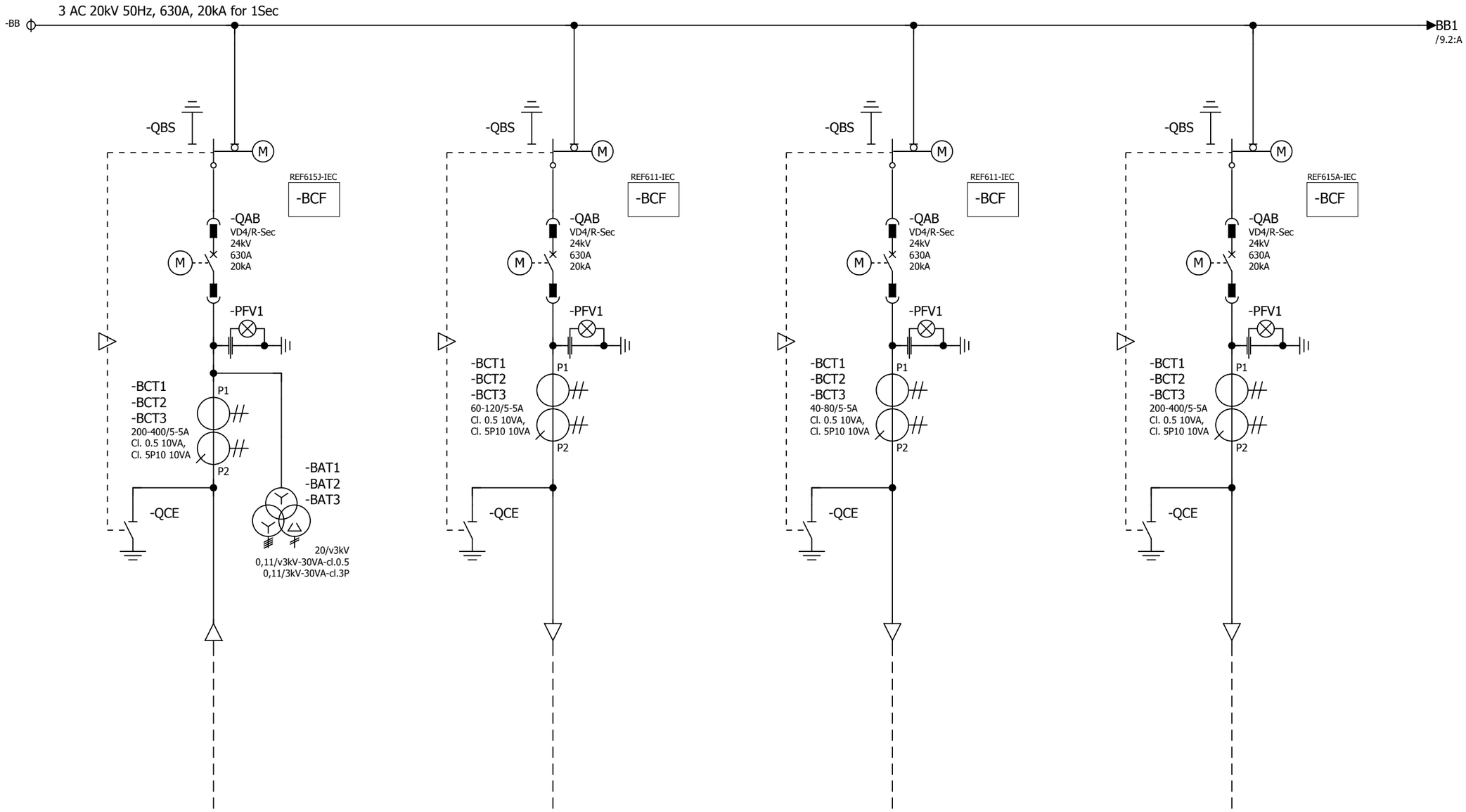

Panel	H01	H02	H03	H04
Panel Name	SBC-W	SBC-W	SBC-W	SBC-W
Description	SBC-W - Incoming from MVD-10	SBC-W - Outgoing TR 22A WTP 1600kVA	SBC-W - Outgoing TR 22B WWTP&Hydrant 1000kVA	SBC-W - Incoming from MVD-21
Rated Current	630A	630A	630A	630A
Max. Cable Size	2x300mm²	2x300mm²	2x300mm²	2x300mm²
Circuit-Diagram	304	306	306	305

Ind.	Revision	Date	Name			
				Date Prep.	15.11.2018	
1	Issued for Approval	18.12.2018	YR	Prepared	YR	
0	First Issued	19.11.2018	YR	Checked	AW	
				Approved	AI	

PROJECT TITLE
MV Switchgear for MNA Serang Plant
Based on: BE318042

ABB EPMV
PT. ABB Sakti Industri

SINGLE LINE DIAGRAM
SLD & GA Drawing
MVD-22 20kV Central WTP Area

Scale		= H00
Customer	PT Multimas Nabati Asahan	& GAD
Drawing Nbr.		Sh. 8
Customer Doc. Nbr.		Cont. 17

WE RESERVE ALL RIGHTS IN THIS DOCUMENT AND IN THE INFORMATION CONTAINED THEREIN. REPRODUCTION, USE OR DISCLOSURE TO THIRD PARTIES WITHOUT EXPESS AUTHORITY IS STRICTLY FORBIDDEN.

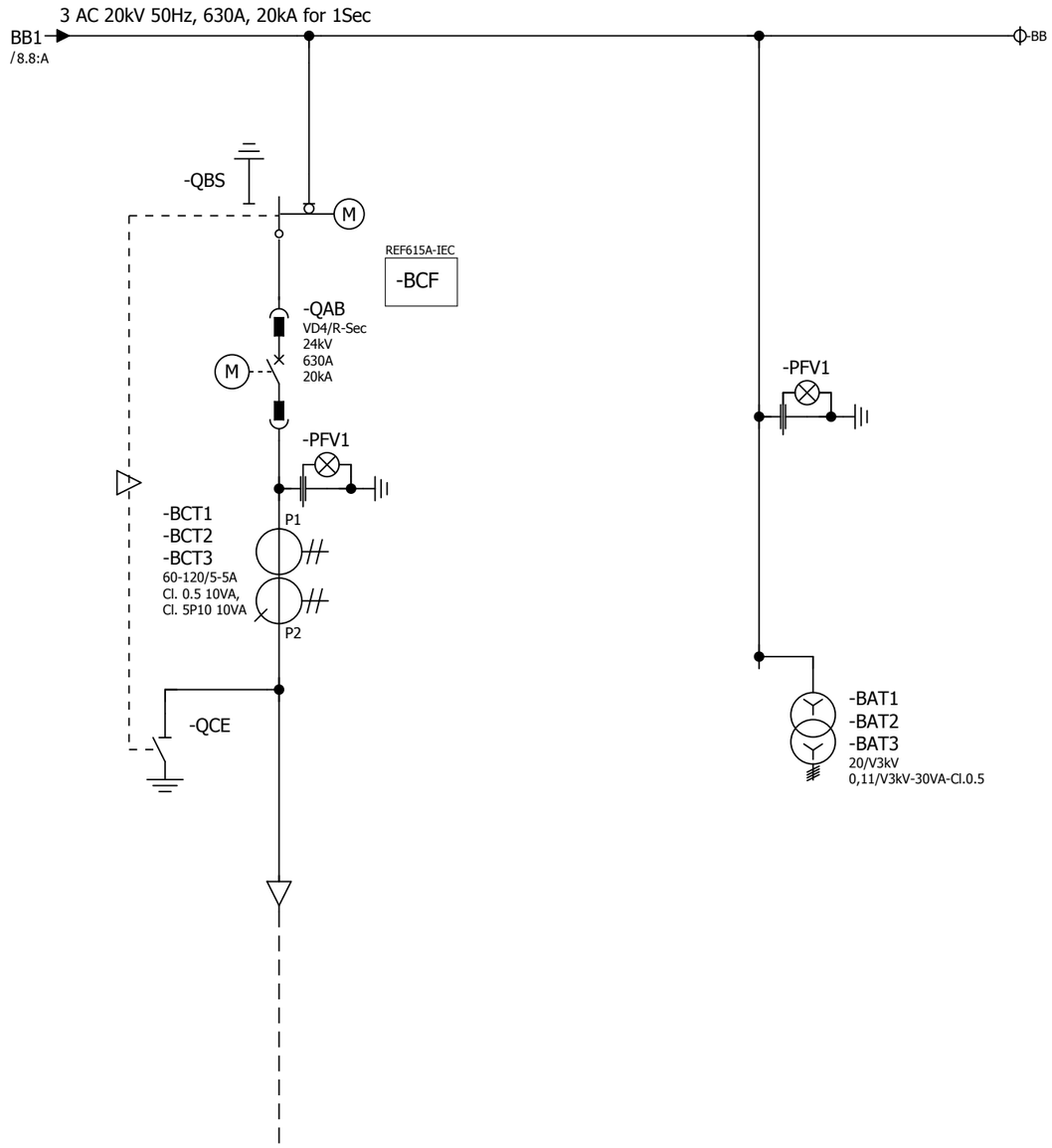

Panel	H05	H06
Panel Name	SBC-W	DRC
Description	SBC-W - Outgoing to MVD-24	DRC - Bus PT
Rated Current	630A	-
Max. Cable Size	2x300mm²	-
Circuit-Diagram	305	308

Ind.	Revision	Date	Name		
				Date Prep.	15.11.2018
1	Issued for Approval	18.12.2018	YR	Prepared	YR
0	First Issued	19.11.2018	YR	Checked	AW
				Approved	AI

PROJECT TITLE
MV Switchgear for MNA Serang Plant
Based on: BE318042

ABB EPMV
PT. ABB Sakti Industri

SINGLE LINE DIAGRAM
SLD & GA Drawing
MVD-22 20kV Central WTP Area

Scale		= H00
Customer	PT Multimas Nabati Asahan	& GAD
Drawing Nbr.		Sh. 9
Customer Doc. Nbr.		Cont. 17

WE RESERVE ALL RIGHTS IN THIS DOCUMENT AND IN THE INFORMATION CONTAINED THEREIN. REPRODUCTION, USE OR DISCLOSURE TO THIRD PARTIES WITHOUT EXPESS AUTHORITY IS STRICTLY FORBIDDEN.

RULES FOR INSTALLATION IN THE ROOM

MINIMUM DISTANCES TO BE RESPECTED DURING INSTALLATION

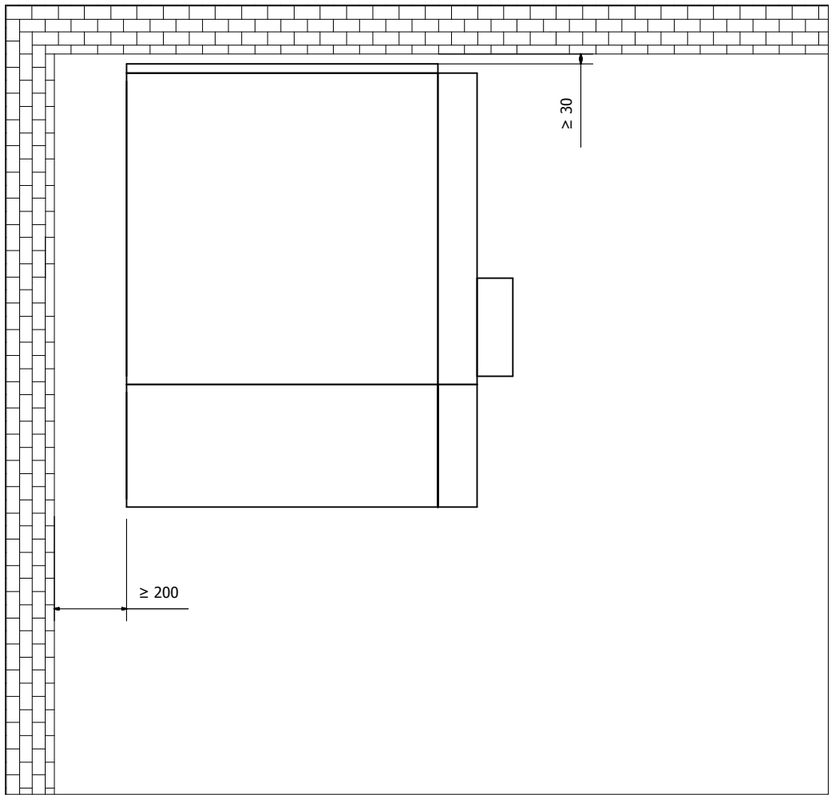

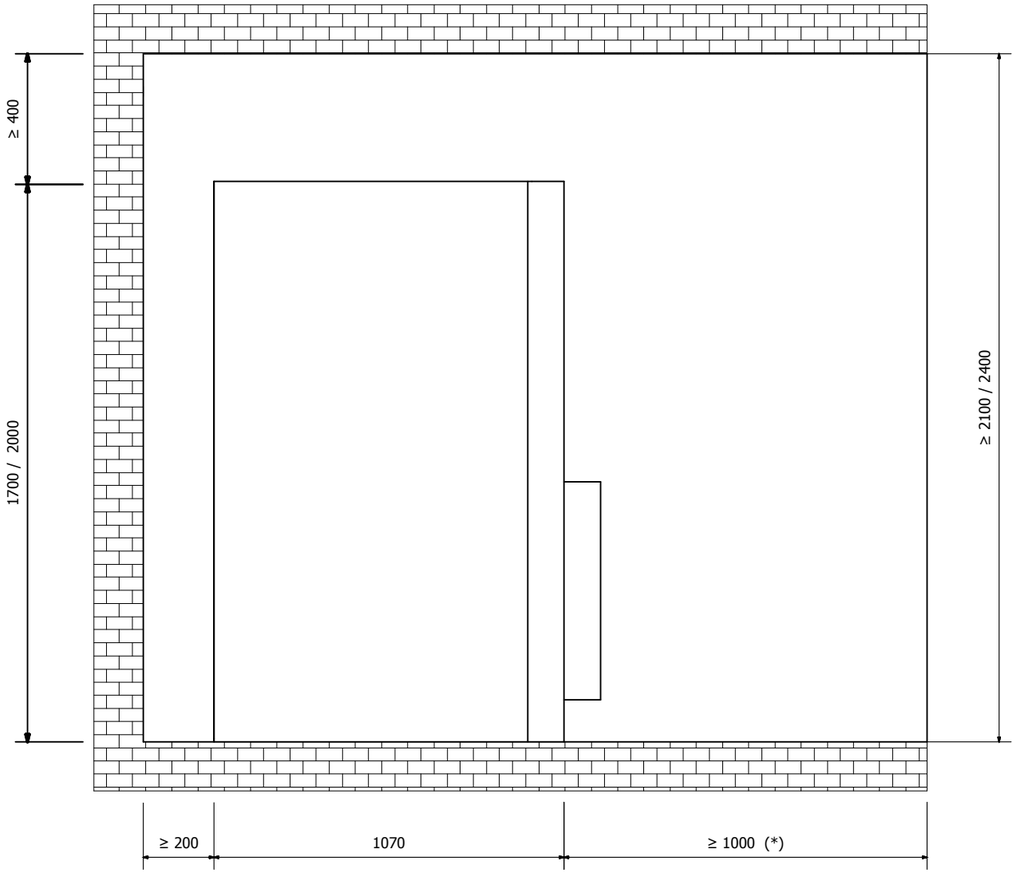

(*) ≥ 1300 mm at least for units with circuit-breaker

- IAC A-F SOLUTION UP TO 16kA 1sec
- ATTENTION : NO ACCESS TO REAR AND LATERAL OF THE SWG ROOM WHILE SWG IS IN SERVICE

Ind.	Revision	Date	Name			
				Date Prep.	15.11.2018	PROJECT TITLE
1	Issued for Approval	18.12.2018	YR	Prepared	YR	MV Switchgear for MNA Serang Plant
0	First Issued	19.11.2018	YR	Checked	AW	
				Approved	AI	Based on: BE318042

ABB EPMV

PT. ABB Sakti Industri

INSTALLATION RULES
SLD & GA Drawing
MVD-22 20kV Central WTP Area

Scale		= H00
Customer	PT Multimas Nabati Asahan	& GAD
Drawing Nbr.		Sh. 10
Customer Doc. Nbr.		Cont. 17

WE RESERVE ALL RIGHTS IN THIS DOCUMENT AND IN THE INFORMATION CONTAINED THEREIN. REPRODUCTION, USE OR DISCLOSURE TO THIRD PARTIES WITHOUT EXPESS AUTHORITY IS STRICTLY FORBIDDEN.

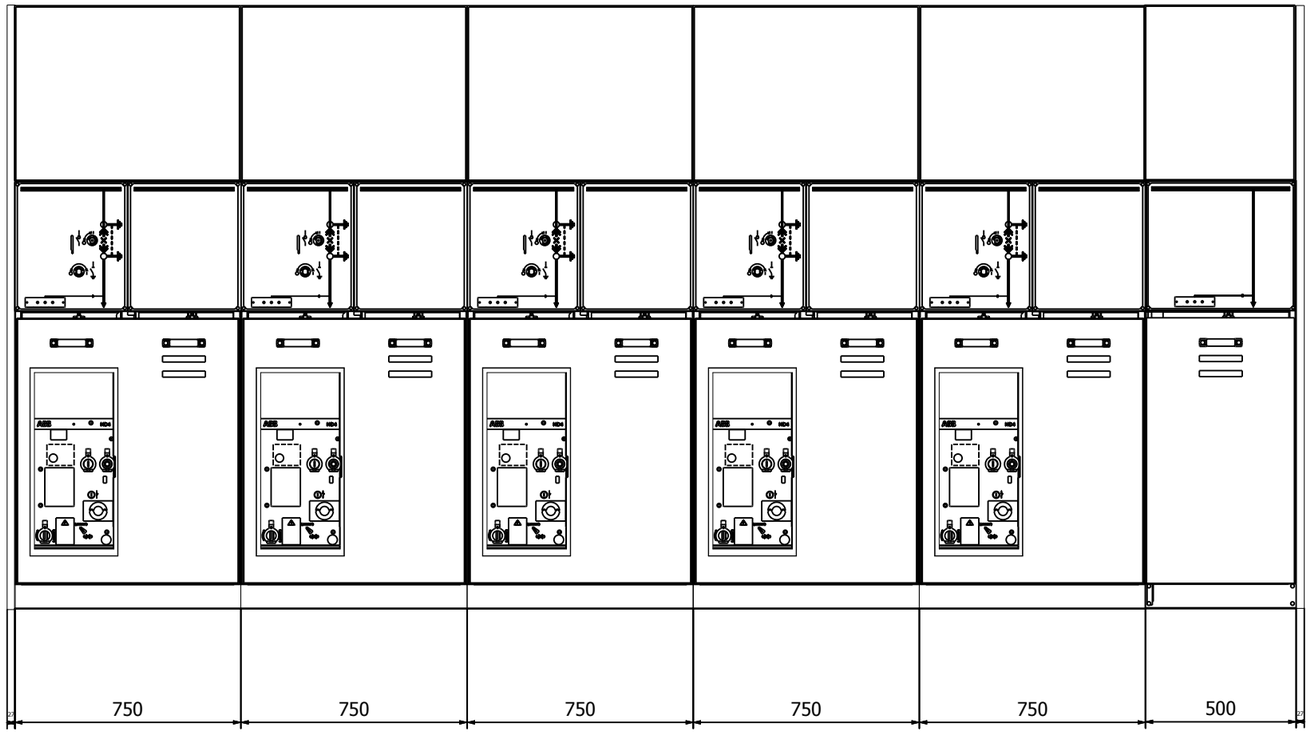

Panel	H01	H02	H03	H04	H05	H06
Panel Type	SBC-W	SBC-W	SBC-W	SBC-W	SBC-W	DRC
Description	SBC-W - Incoming	SBC-W - Outgoing TR 1600kVA	SBC-W - Outgoing TR 1600kVA	SBC-W - Outgoing	SBC-W - Outgoing	DRC - Bus PT

Ind.	Revision	Date	Name		
				Date Prep.	15.11.2018
1	Issued for Approval	18.12.2018	YR	Prepared	YR
0	First Issued	19.11.2018	YR	Checked	AW
				Approved	AI

PROJECT TITLE
MV Switchgear for MNA Serang Plant
Based on: BE318042

ABB EPMV
PT. ABB Sakti Industri

FRONT VIEW & GA
SLD & GA Drawing
MVD-22 20kV Central WTP Area

Scale		= H00
Customer	PT Multimas Nabati Asahan	& GAD
Drawing Nbr.		Sh. 11
Customer Doc. Nbr.		Cont. 17

WE RESERVE ALL RIGHTS IN THIS DOCUMENT AND IN THE INFORMATION CONTAINED THEREIN. REPRODUCTION, USE OR DISCLOSURE TO THIRD PARTIES WITHOUT EXPESS AUTHORITY IS STRICTLY FORBIDDEN.

FOUNDATION FRAMES

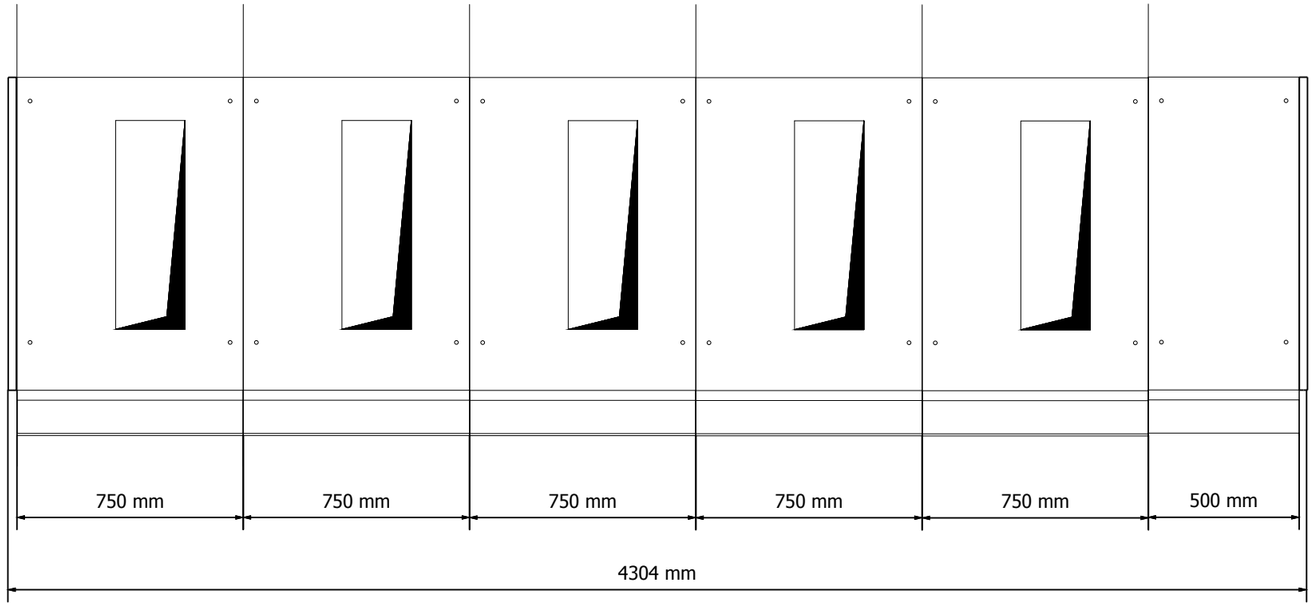

Panel	H01	H02	H03	H04	H05	H06
Panel Type	SBC-W	SBC-W	SBC-W	SBC-W	SBC-W	DRC
Description	SBC-W - Incoming	SBC-W - Outgoing TR 1600kVA	SBC-W - Outgoing TR 1600kVA	SBC-W - Outgoing	SBC-W - Outgoing	DRC - Bus PT

Ind.	Revision	Date	Name		
				Date Prep.	15.11.2018
1	Issued for Approval	18.12.2018	YR	Prepared	YR
0	First Issued	19.11.2018	YR	Checked	AW
				Approved	AI

PROJECT TITLE
MV Switchgear for MNA Serang Plant
Based on: BE318042

ABB EPMV
PT. ABB Sakti Industri

FOUNDATION FRAMES
SLD & GA Drawing
MVD-22 20kV Central WTP Area

Scale		= H00
Customer	PT Multimas Nabati Asahan	& GAD
Drawing Nbr.		Sh. 12
Customer Doc. Nbr.		Cont. 17

WE RESERVE ALL RIGHTS IN THIS DOCUMENT AND IN THE INFORMATION CONTAINED THEREIN. REPRODUCTION, USE OR DISCLOSURE TO THIRD PARTIES WITHOUT EXPESS AUTHORITY IS STRICTLY FORBIDDEN.

FOUNDATION FRAMES DETAILS

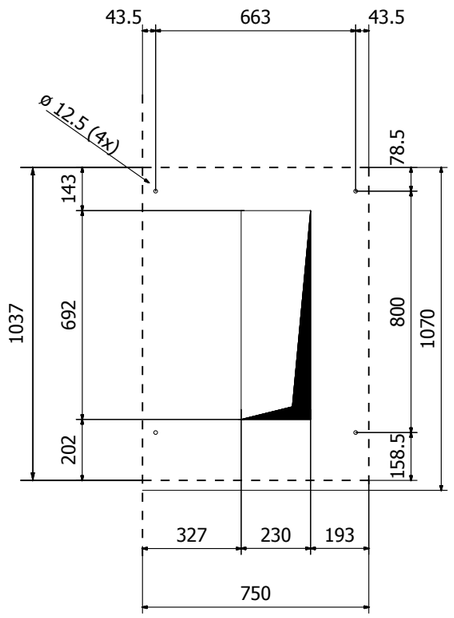

PANELS: H01

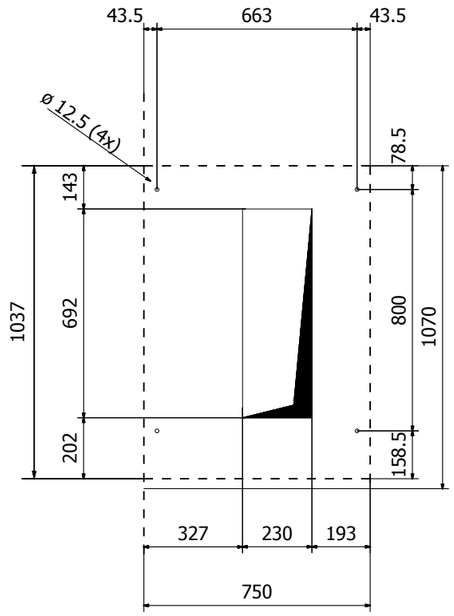

PANELS: H02, H03, H04, H05

				Date Prep.	15.11.2018	PROJECT TITLE	ABB EPMV	FOUNDATION FRAMES DETAILS	Scale		= H00
1	Issued for Approval	18.12.2018	YR	Prepared	YR	MV Switchgear for MNA Serang Plant		SLD & GA Drawing	Customer	PT Multimas Nabati Asahan	& GAD
0	First Issued	19.11.2018	YR	Checked	AW		PT. ABB Sakti Industri	MVD-22 20kV Central WTP Area	Drawing Nbr.		Sh. 13
Ind.	Revision	Date	Name	Approved	AI	Based on: BE318042			Customer Doc. Nbr.		Cont. 17

WE RESERVE ALL RIGHTS IN THIS DOCUMENT AND IN THE INFORMATION CONTAINED THEREIN. REPRODUCTION, USE OR DISCLOSURE TO THIRD PARTIES WITHOUT EXPESS AUTHORITY IS STRICTLY FORBIDDEN.

FOUNDATION FRAMES DETAILS

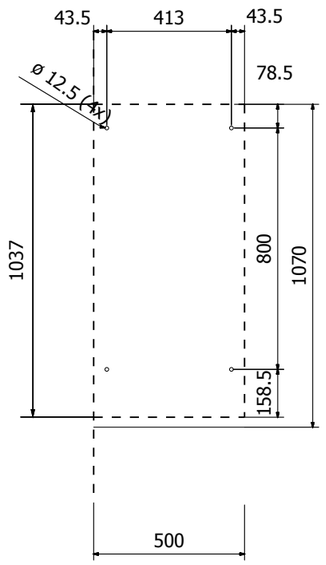

PANELS: H06

				Date Prep.	15.11.2018	PROJECT TITLE	ABB EPMV	FOUNDATION FRAMES DETAILS	Scale		= H00
1	Issued for Approval	18.12.2018	YR	Prepared	YR	MV Switchgear for MNA Serang Plant		SLD & GA Drawing	Customer	PT Multimas Nabati Asahan	& GAD
0	First Issued	19.11.2018	YR	Checked	AW		PT. ABB Sakti Industri	MVD-22 20kV Central WTP Area	Drawing Nbr.		Sh. 14
Ind.	Revision	Date	Name	Approved	AI	Based on: BE318042			Customer Doc. Nbr.		Cont. 17

WE RESERVE ALL RIGHTS IN THIS DOCUMENT AND IN THE INFORMATION CONTAINED THEREIN. REPRODUCTION, USE OR DISCLOSURE TO THIRD PARTIES WITHOUT EXPESS AUTHORITY IS STRICTLY FORBIDDEN.

SECTION VIEW

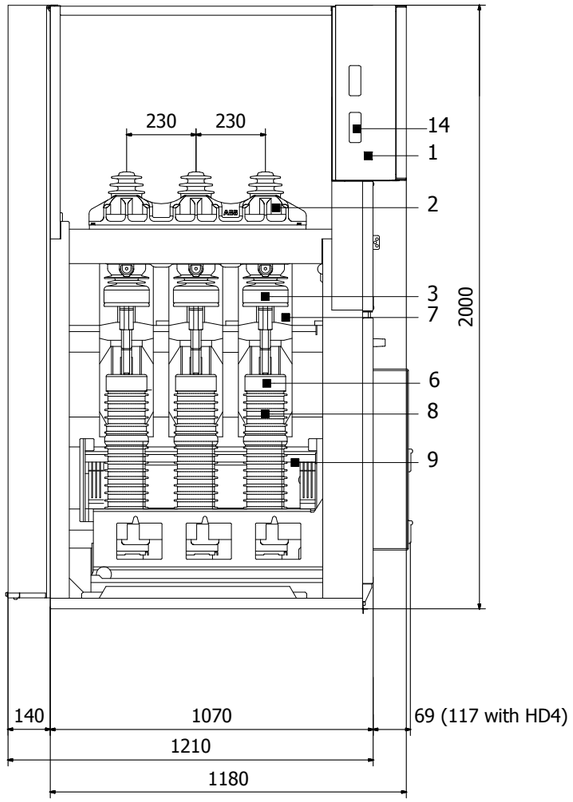

Panel : H01

-	DISTANCE BETWEEN THE CABLE CONNECTION POINT AND THE FLOOR = 480mm
1	LVC
2	SWITCH DISCONNECTOR
3	LOWER COPPER BARS
6	CURRENT TRANSFORMER
7	VOLTAGE TRANSFORMER
8	CIRCUIT BREAKER
9	EARTHING-SWITCH
14	INTERPANEL WIRING PASSAGE

Ind.	Revision	Date	Name			
				Date Prep.	15.11.2018	
1	Issued for Approval	18.12.2018	YR	Prepared	YR	
0	First Issued	19.11.2018	YR	Checked	AW	
				Approved	AI	

PROJECT TITLE
MV Switchgear for MNA Serang Plant
Based on: BE318042

ABB EPMV
PT. ABB Sakti Industri

SECTION VIEW
SLD & GA Drawing
MVD-22 20kV Central WTP Area

Scale		= H00
Customer	PT Multimas Nabati Asahan	& GAD
Drawing Nbr.		Sh. 15
Customer Doc. Nbr.		Cont. 17

WE RESERVE ALL RIGHTS IN THIS DOCUMENT AND IN THE INFORMATION CONTAINED THEREIN. REPRODUCTION, USE OR DISCLOSURE TO THIRD PARTIES WITHOUT EXPESS AUTHORITY IS STRICTLY FORBIDDEN.

SECTION VIEW

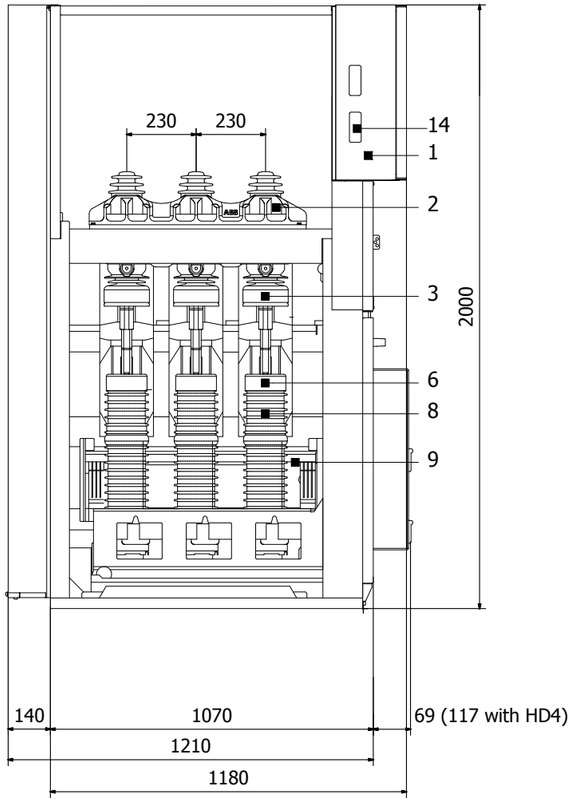

-	DISTANCE BETWEEN THE CABLE CONNECTION POINT AND THE FLOOR = 480mm
1	LVC
2	SWITCH DISCONNECTOR
3	LOWER COPPER BARS
6	CURRENT TRANSFORMER
8	CIRCUIT BREAKER
9	EARTHING-SWITCH
14	INTERPANEL WIRING PASSAGE

Panel : H02, H03, H04, H05

				Date Prep.	15.11.2018	PROJECT TITLE	ABB EPMV	SECTION VIEW	Scale		= H00
1	Issued for Approval	18.12.2018	YR	Prepared	YR	MV Switchgear for MNA Serang Plant		SLD & GA Drawing	Customer	PT Multimas Nabati Asahan	& GAD
0	First Issued	19.11.2018	YR	Checked	AW		PT. ABB Sakti Industri	MVD-22 20kV Central WTP Area	Drawing Nbr.		Sh. 16
Ind.	Revision	Date	Name	Approved	AI	Based on: BE318042			Customer Doc. Nbr.		Cont. 17

WE RESERVE ALL RIGHTS IN THIS DOCUMENT AND IN THE INFORMATION CONTAINED THEREIN. REPRODUCTION, USE OR DISCLOSURE TO THIRD PARTIES WITHOUT EXPESS AUTHORITY IS STRICTLY FORBIDDEN.

SECTION VIEW

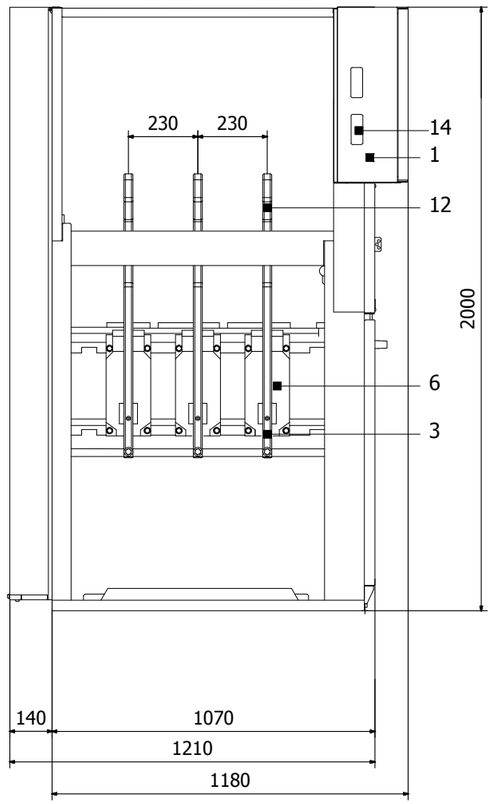

Panel : H06

-	DISTANCE BETWEEN THE CABLE CONNECTION POINT AND THE FLOOR = 670mm
1	LVC
3	LOWER COPPER BARS
6	VOLTAGE TRANSFORMER
12	TOP COPPER BARS
14	INTERPANEL WIRING PASSAGE

Ind.	Revision	Date	Name		
				Date Prep.	15.11.2018
1	Issued for Approval	18.12.2018	YR	Prepared	YR
0	First Issued	19.11.2018	YR	Checked	AW
				Approved	AI

PROJECT TITLE
MV Switchgear for MNA Serang Plant
Based on: BE318042

ABB EPMV
PT. ABB Sakti Industri

SECTION VIEW
SLD & GA Drawing
MVD-22 20kV Central WTP Area

Scale		= H00
Customer	PT Multimas Nabati Asahan	& GAD
Drawing Nbr.		Sh. 17
Customer Doc. Nbr.		Cont. 17

WE RESERVE ALL RIGHTS IN THIS DOCUMENT AND IN THE INFORMATION CONTAINED THEREIN. REPRODUCTION, USE OR DISCLOSURE TO THIRD PARTIES WITHOUT EXPESS AUTHORITY IS STRICTLY FORBIDDEN.